ALLIED NIPPON PRIVATE LIMITED
(Formerly known as Allied Nippon Ltd.)
CIN : U34300DL1988PTC030910

Make: ACURA

Model: RLX

Part Number: ADB33013

Vehicle Manufacturing/Engine:

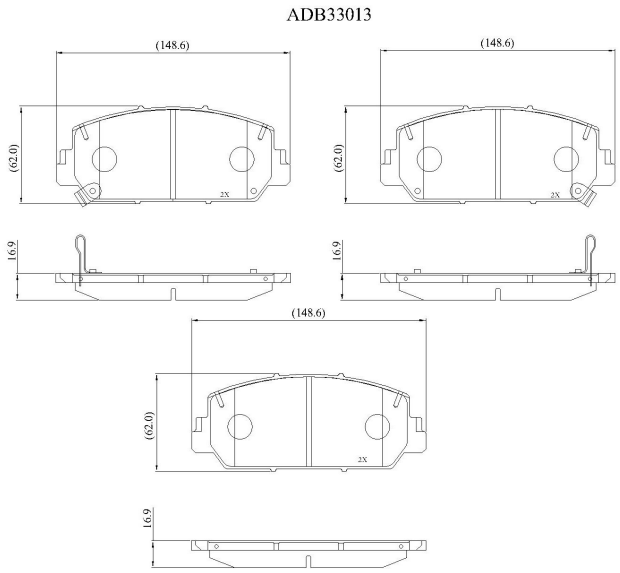

Specifications

Fitting Position	:	Front
Model Date	:	2014-2018

Or. Caliper	:	
WVA	:	
FMSI	:	D1697
Length	:	148.6
Width	:	62
Thickness	:	16.9