Make: ACURA

Model: RLX

Part Number: ADB33048

Vehicle Manufacturing/Engine:

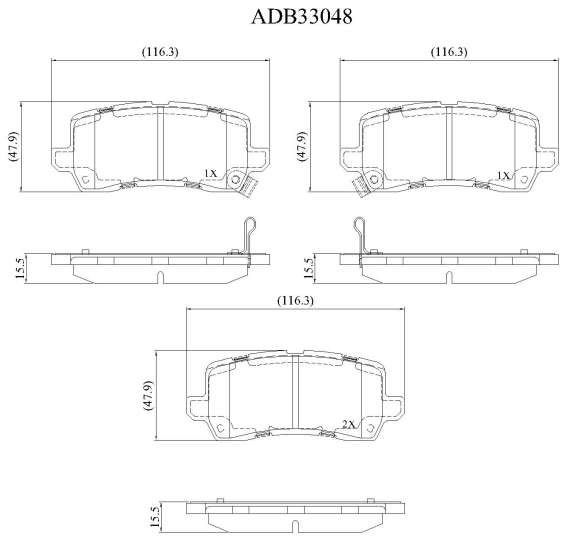

Specifications

Fitting Position	:	Rear
Model Date	:	14-16
Or. Caliper	:	

WVA	:	
FMSI	:	D1698
Length	:	116.3
Width	:	47.9
Thickness	:	15.5