Make: ALFA ROMEO

Model: 147

Part Number: ADB13181

Vehicle Manufacturing/Engine:

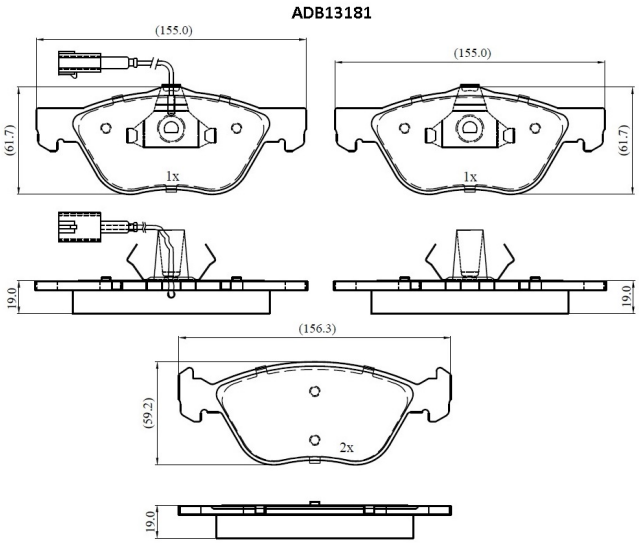

Specifications

Fitting Position	:	Front
Model Date	:	2001-2010

Or. Caliper	:	
WVA	:	23289
FMSI	:	
Length	:	155.0/156.3
Width	:	61.7/59.2
Thickness	:	19