Make: ALFA ROMEO

Model: Alfa 145/146 (->97)

Part Number: ADB0140

Vehicle Manufacturing/Engine:

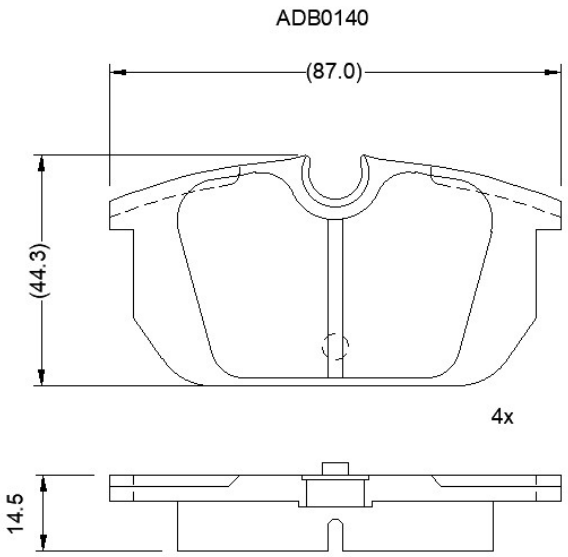

Specifications

Fitting Position	:	Rear

Model Date	:	09/94-01/97
Or. Caliper	:	Locus
WVA	:	21103
FMSI	:	
Length	:	87
Width	:	44.4
Thickness	:	14.5