Make: ALFA ROMEO

Model: Alfa 147

Part Number: ADB1856

Vehicle Manufacturing/Engine:

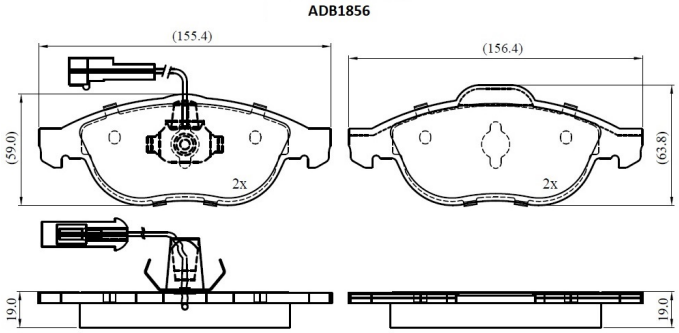

Specifications

Fitting Position	:	Front
Model Date	:	10/00->
Or. Caliper	:	Ate
WVA	:	23140
FMSI	:	
Length	:	156.4/155.6

Width	:	63.8/59.0
Thickness	:	19