Make: ALFA ROMEO

Model: Alfa 155

Part Number: ADB0140

Vehicle Manufacturing/Engine:

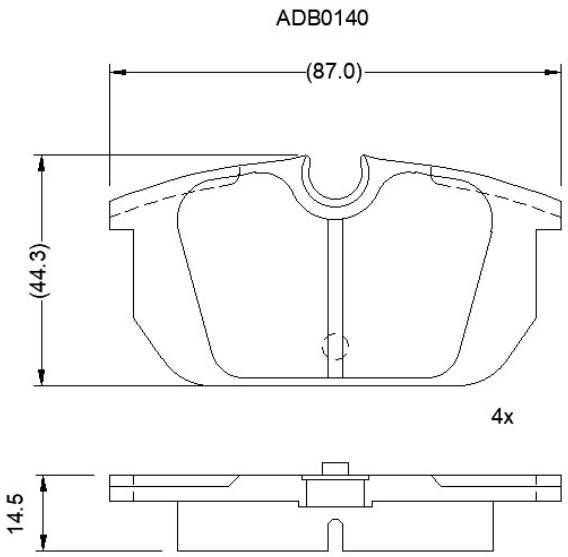

Specifications

Fitting Position	:	Rear

Model Date	:	01/92-04/98
Or. Caliper	:	Locus
WVA	:	21103
FMSI	:	
Length	:	87
Width	:	44.4
Thickness	:	14.5