Make: ALFA ROMEO

Model: Alfa 166

Part Number: ADB01095

Vehicle Manufacturing/Engine:

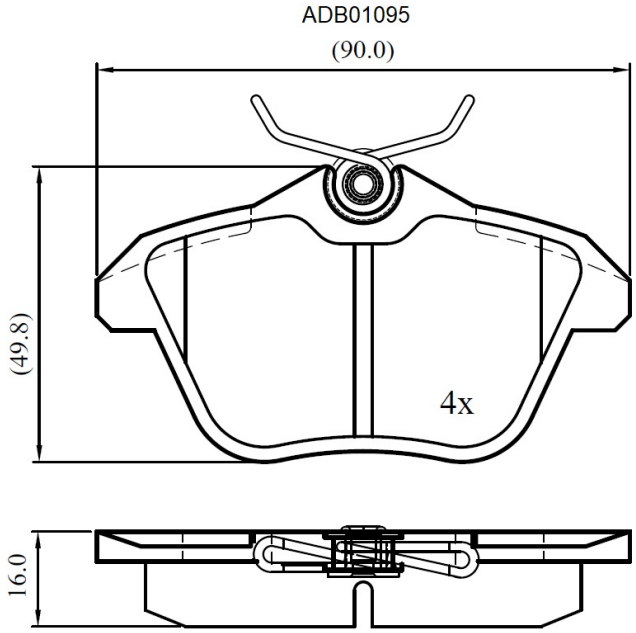

Specifications

Fitting Position	:	Rear

Model Date	:	10/98->
Or. Caliper	:	Lucas
WVA	:	21606
FMSI	:	
Length	:	90
Width	:	49.8
Thickness	:	16