Make: ALFA ROMEO

Model: Alfa 166

Part Number: ADB11721

Vehicle Manufacturing/Engine:

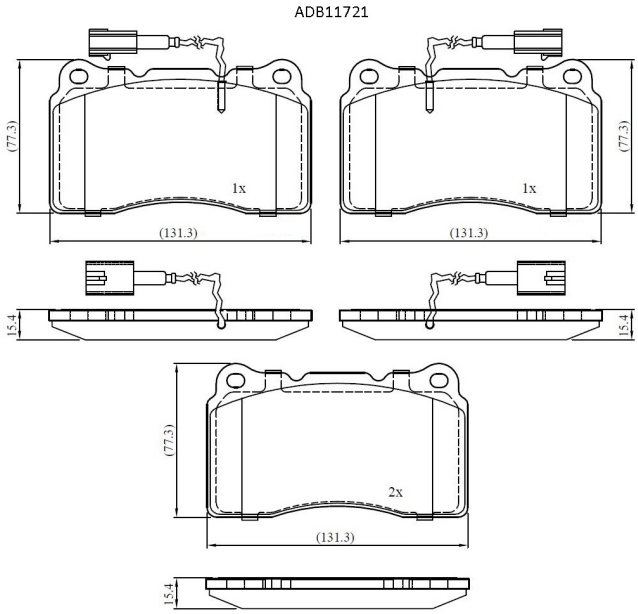

Specifications

Fitting Position	:	Front

Model Date	:	10/03->
Or. Caliper	:	Brembo
WVA	:	23,09,22,31,10,23,111
FMSI	:	
Length	:	131.3
Width	:	77.3
Thickness	:	15.4