Make: ALFA ROMEO

Model: Alfa 75

Part Number: ADB1312

Vehicle Manufacturing/Engine:

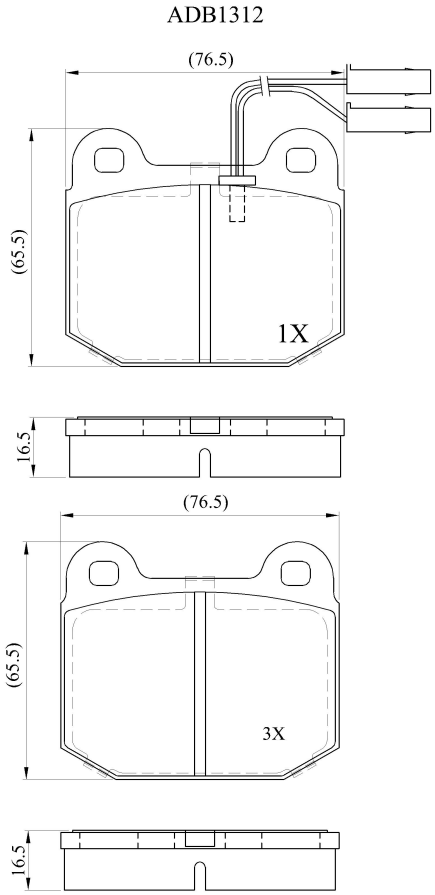

Specifications

Fitting Position	:	Front
Model Date	:	09/90-01/93
Or. Caliper	:	Ate/Brembo
WVA	:	2,03,23,20,997
FMSI	:	
Length	:	76.5
Width	:	65.5
Thickness	:	16.5