Make: ALFA ROMEO

Model: Giulietta

Part Number: ADB16050

Vehicle Manufacturing/Engine:

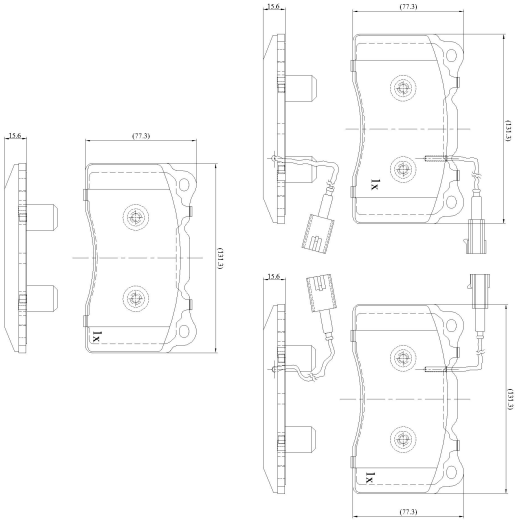

ADB16050

Specifications

Fitting Position	:	Front
Model Date	:	04/2010->
Or. Caliper	:	
WVA	:	23756
FMSI	:	
Length	:	131.3
Width	:	77.3
Thickness	:	15.6