Make: ALFA ROMEO

Model: MITO

Part Number: ADB16013

Vehicle Manufacturing/Engine:

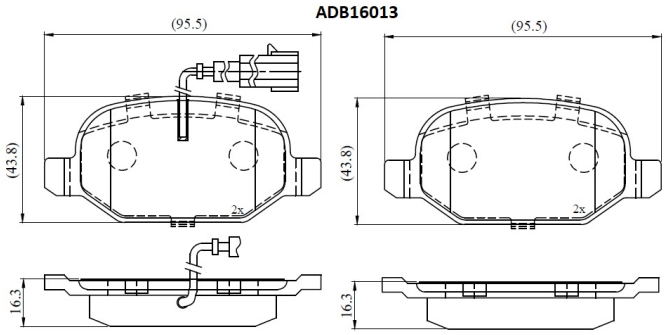

Specifications

Fitting Position	:	Rear
Model Date	:	09/08-
Or. Caliper	:	TRW
WVA	:	23661, 25237
FMSI	:	
Length	:	95

Width	:	43.8
Thickness	:	16.3