Make: AUDI

Model: 100 (08/82-> 91 Petrol 5 cyl)

Part Number: ADB0511

Vehicle Manufacturing/Engine:

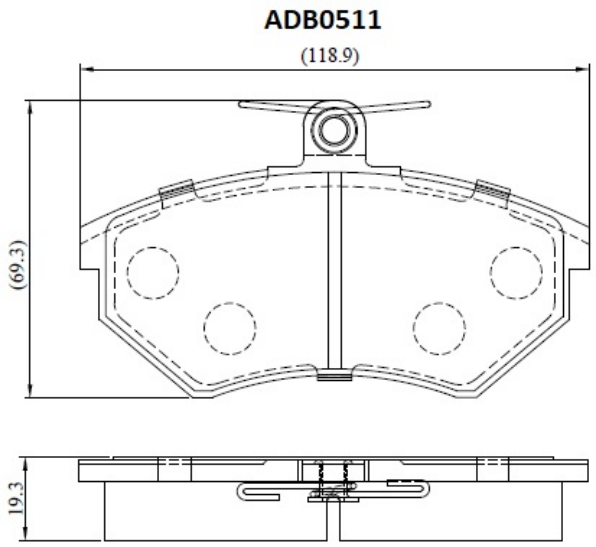

Specifications

Fitting Position	:	Front
Model Date	:	08/82-08/86

Or. Caliper	:	Lucas
WVA	:	20168
FMSI	:	
Length	:	118.9
Width	:	69.3
Thickness	:	19.3