Make: AUDI

Model: 100 (91-> 95)

Part Number: ADB0558

Vehicle Manufacturing/Engine:

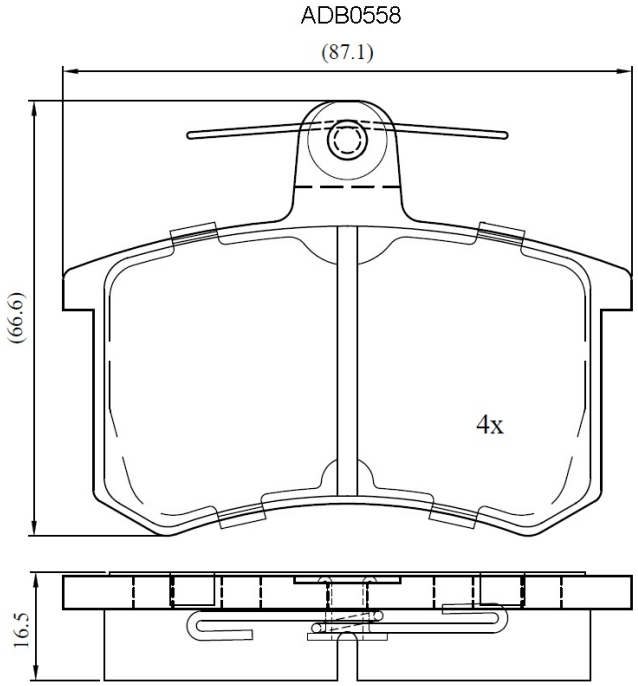

Specifications

Fitting Position	:	Rear
Model Date	:	01/91-01/95
Or. Caliper	:	Lucas
WVA	:	21144
FMSI	:	
Length	:	87.1
Width	:	66.6
Thickness	:	16.5