Make: AUDI

Model: 100 (91-> 95)

Part Number: ADB1715

Vehicle Manufacturing/Engine:

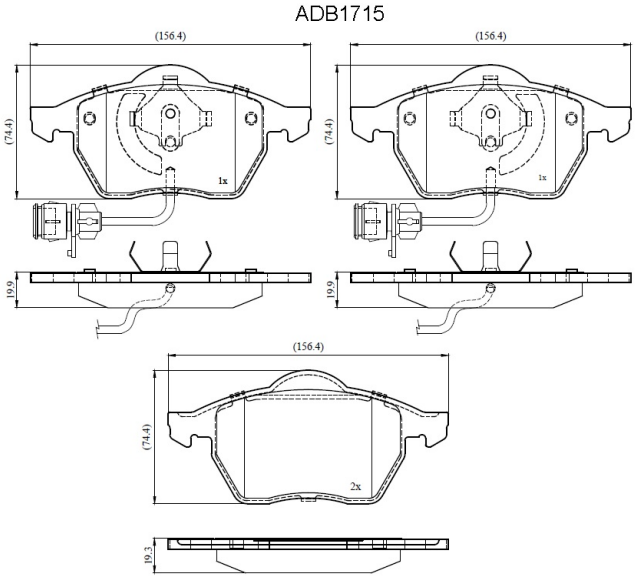

Specifications

Fitting Position	:	Front
Model Date	:	01/91-01/95

Or. Caliper	:	Ate
WVA	:	20676
FMSI	:	
Length	:	156.4
Width	:	74.4
Thickness	:	19.3