Make: AUDI

Model: A1 City Carver

Part Number: ADB03272

Vehicle Manufacturing/Engine:

ADB03272

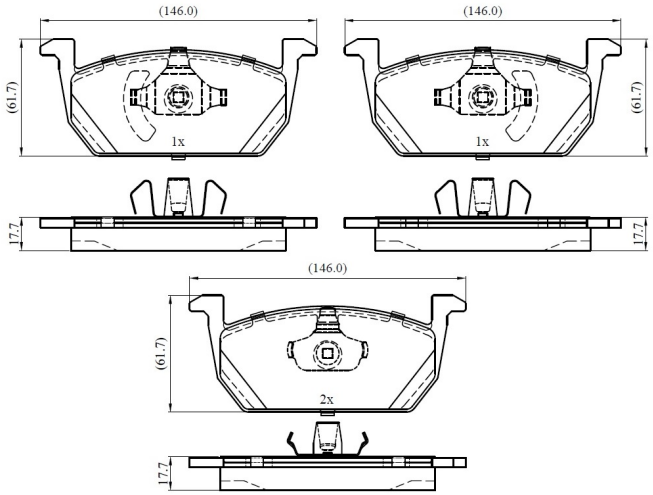

Specifications

Fitting Position	:	Front
Model Date	:	2019-

Or. Caliper	:	
WVA	:	22631
FMSI	:	
Length	:	146
Width	:	61.7
Thickness	:	17.7