Make: AUDI

Model: A4 (->01/01)

Part Number: ADB0736

Vehicle Manufacturing/Engine:

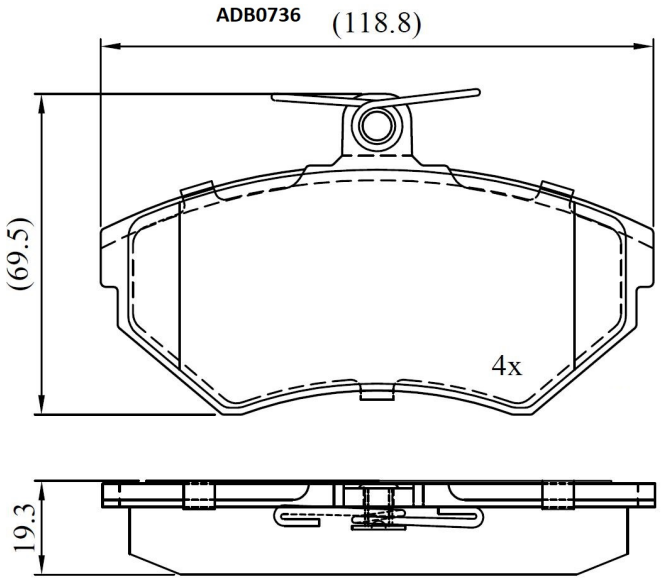

Specifications

Fitting Position	:	Front
Model Date	:	01/01->

Or. Caliper	:	Lucas
WVA	:	21945
FMSI	:	
Length	:	119
Width	:	69
Thickness	:	19.3