Make: AUDI

Model: A4 Allroad

Part Number: ADB12352

Vehicle Manufacturing/Engine:

ADB12352

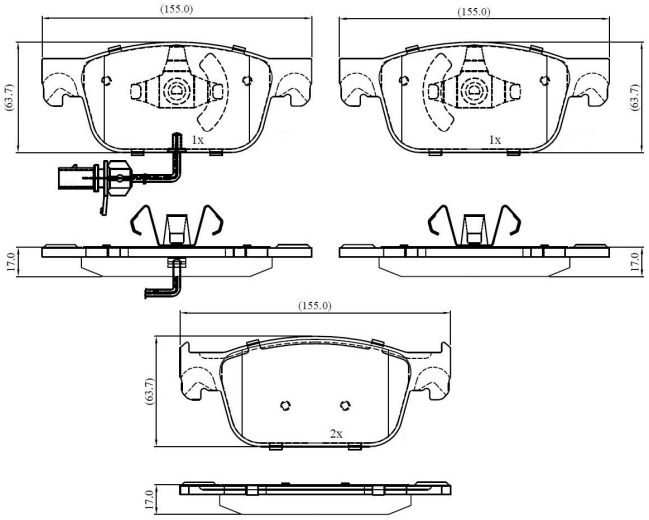

Specifications

Fitting Position	:	Front
Model Date	:	1/2016 >

Or. Caliper	:	
WVA	:	22383, 22384
FMSI	:	
Length	:	155
Width	:	63.7
Thickness	:	17