Make: AUDI

Model: A4 B9 Avant

Part Number: ADB13216

Vehicle Manufacturing/Engine:

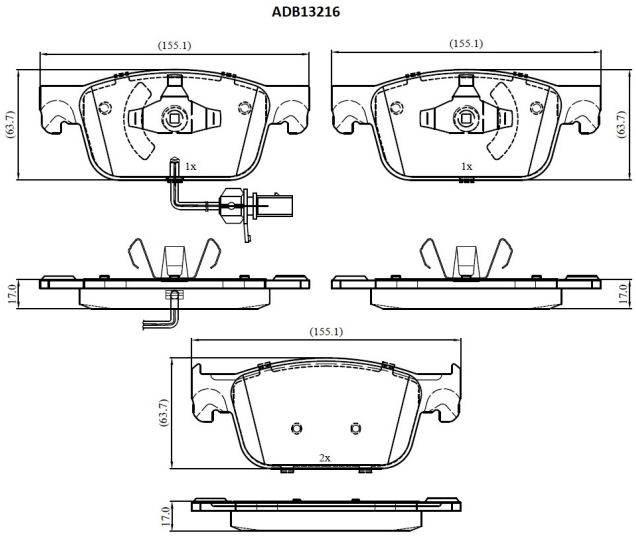

Specifications

Fitting Position	:	Front
Model Date	:	2015-2018
Or. Caliper	:	

WVA	:	22383
FMSI	:	
Length	:	155.1
Width	:	63.7
Thickness	:	17