Make: AUDI

Model: A4

Part Number: ADB01709

Vehicle Manufacturing/Engine:

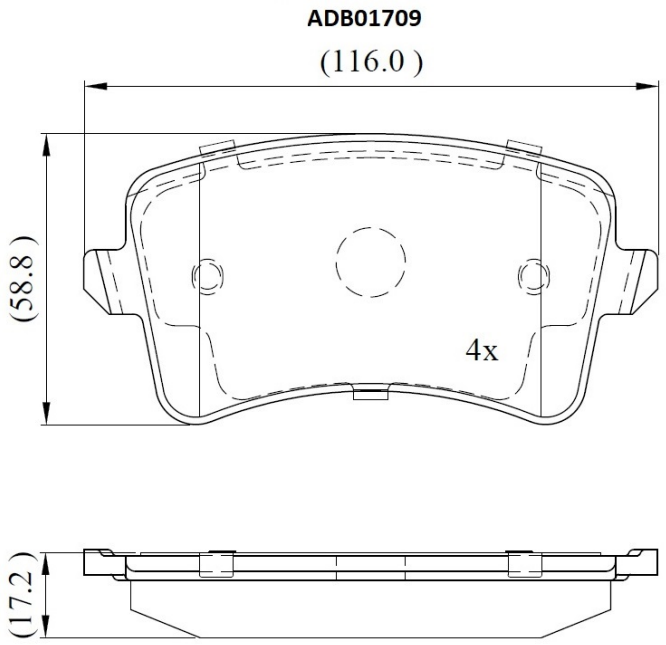

Specifications

Fitting Position	:	Rear

Model Date	:	06/08->
Or. Caliper	:	Lucas
WVA	:	24606
FMSI	:	
Length	:	116
Width	:	58.8
Thickness	:	17.2