Make: AUDI

Model: A5 Sportback

Part Number: ADB23188

Vehicle Manufacturing/Engine:

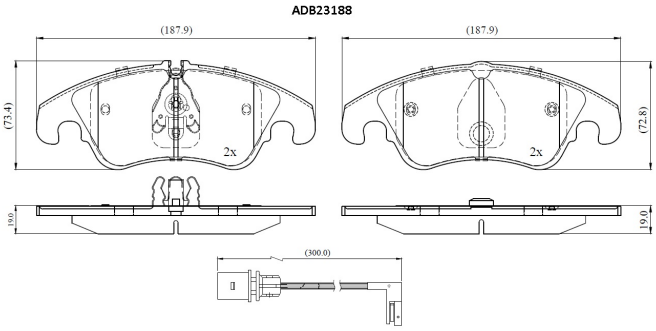

Specifications

Fitting Position	:	Front
Model Date	:	2015-2017
Or. Caliper	:	
WVA	:	24743
FMSI	:	
Length	:	187.9

Width	:	73.4/72.8
Thickness	:	19