Make: AUDI

Model: A5

Part Number: ADB11591

Vehicle Manufacturing/Engine:

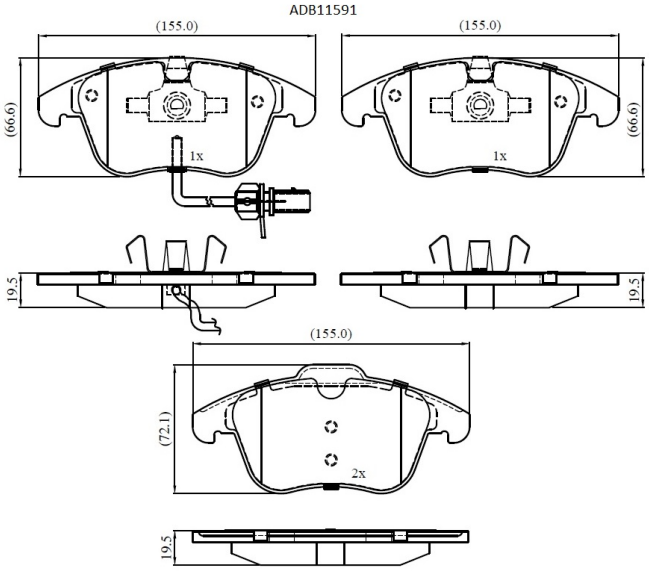

Specifications

Fitting Position	:	Front
Model Date	:	05/09->

Or. Caliper	:	Ate
WVA	:	24,70,52,47,06,24,707
FMSI	:	
Length	:	156.4/155.0
Width	:	71.7/66.7
Thickness	:	19.5