Make: AUDI

Model: A6 Avant

Part Number: ADB22121

Vehicle Manufacturing/Engine:

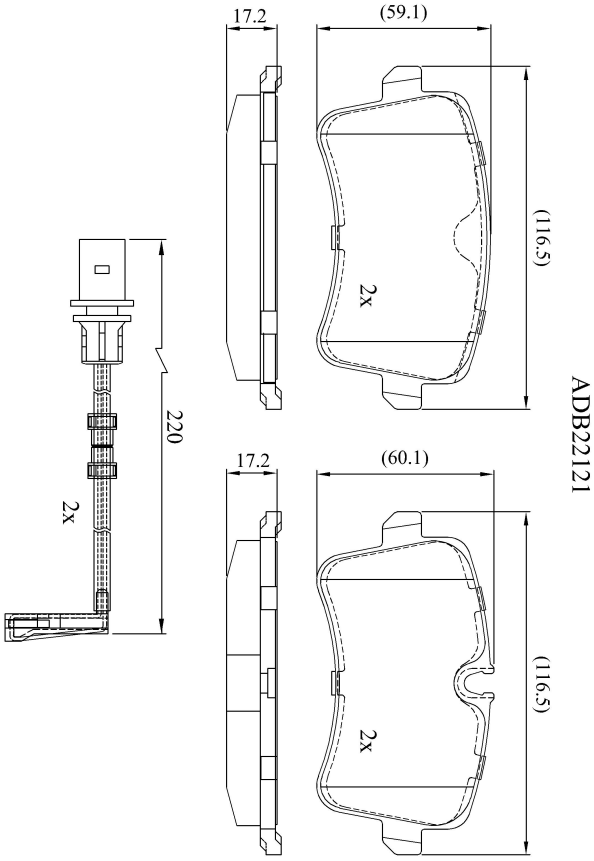

Specifications

Fitting Position	:	Rear
Model Date	:	05/11-
Or. Caliper	:	TRW
WVA	:	24606, 25214
FMSI	:	
Length	:	116.5
Width	:	59.1
Thickness	:	17.2