Make: AUDI

Model: A6 C7 Avant

Part Number: ADB23186

Vehicle Manufacturing/Engine:

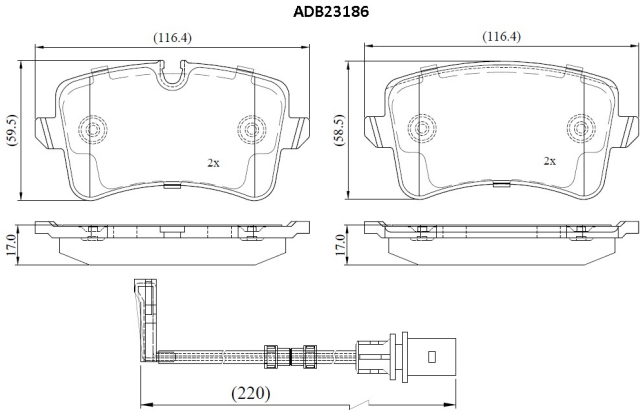

Specifications

Fitting Position	:	Rear
Model Date	:	2015-2018
Or. Caliper	:	
WVA	:	25214
FMSI	:	

Length	:	116.4
Width	:	59.5/58.5
Thickness	:	17