## Make: AUDI

## Model: A7 Sportback

## Part Number: ADB23186

## Vehicle Manufacturing/Engine:

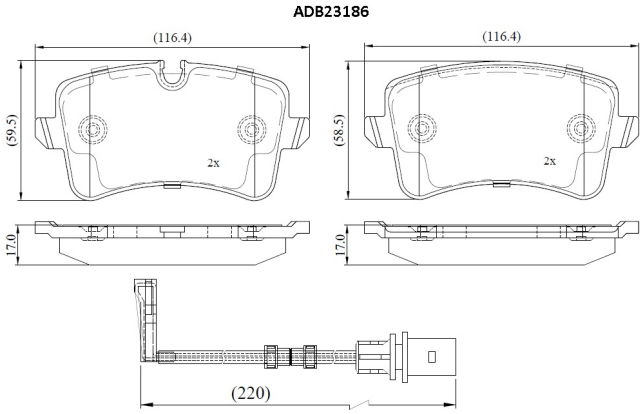


### Specifications

| | | |
|---|---|---|
| **Fitting Position** | : | Rear |
| **Model Date** | : | 2014-2018 |
| **Or. Caliper** | : | |
| **WVA** | : | 25214 |
| **FMSI** | : | |

| | | |
|---|---|---|
| **Length** | : | 116.4 |
| **Width** | : | 59.5/58.5 |
| **Thickness** | : | 17 |