Make: AUDI

Model: A8 D5

Part Number: ADB02691

Vehicle Manufacturing/Engine:

ADB02691

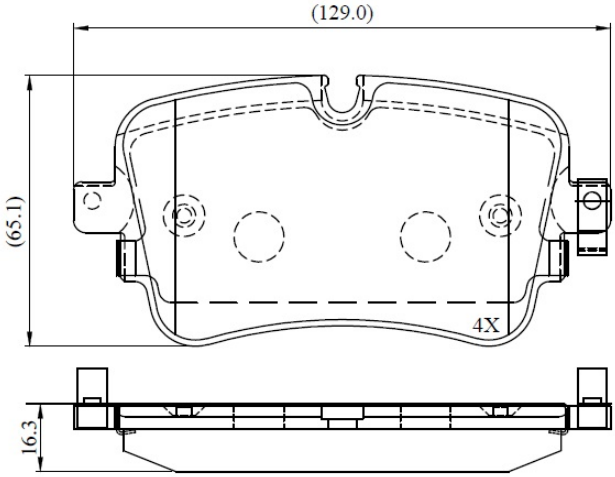

Specifications

Fitting Position	:	Rear
Model Date	:	2018-

Or. Caliper	:	
WVA	:	22307
FMSI	:	
Length	:	129.3
Width	:	64.7
Thickness	:	17