Make: AUDI

Model: A8

Part Number: ADB22120

Vehicle Manufacturing/Engine:

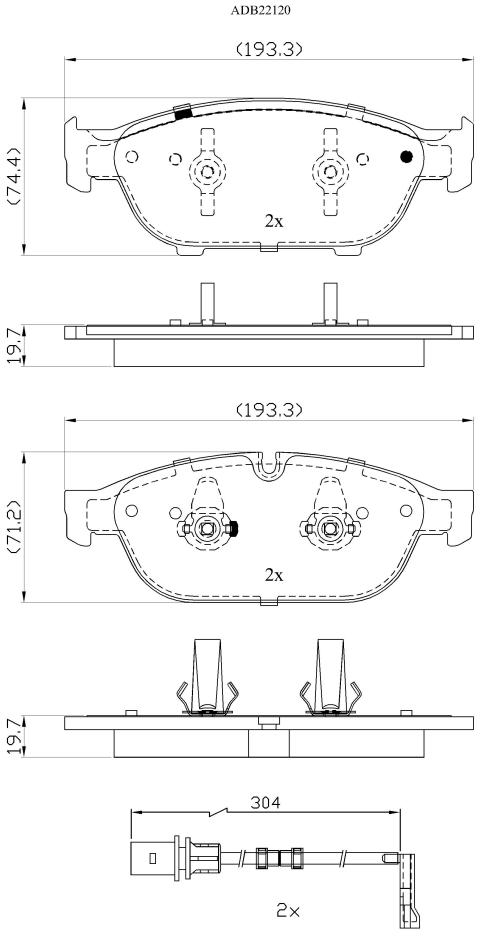

Specifications

Fitting Position	:	Front
Model Date	:	11/09-
Or. Caliper	:	Teves
WVA	:	25158, 25159
FMSI	:	
Length	:	193.3
Width	:	74.4/71.2
Thickness	:	19.7