Make: AUDI

Model: Coupe (-> 08/89)

Part Number: ADB0105

Vehicle Manufacturing/Engine:

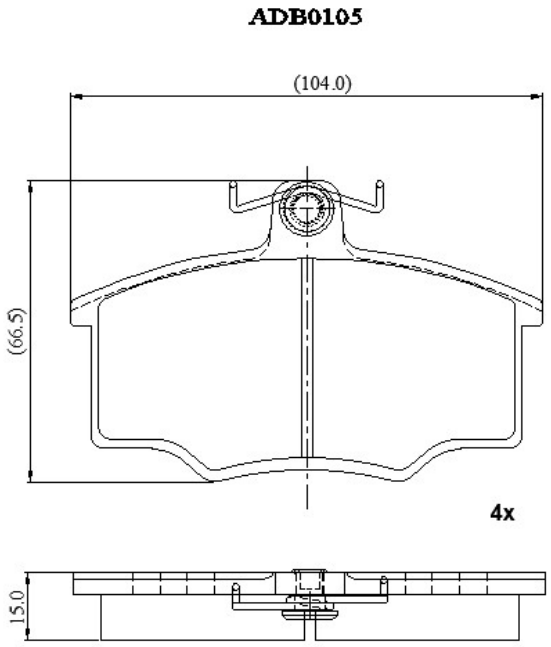

Specifications

Fitting Position	:	Front
Model Date	:	07/82-07/84
Or. Caliper	:	Lucas
WVA	:	20574
FMSI	:	
Length	:	104
Width	:	66.5
Thickness	:	15