Make: AUDI

Model: Q5

Part Number: ADB02778

Vehicle Manufacturing/Engine:

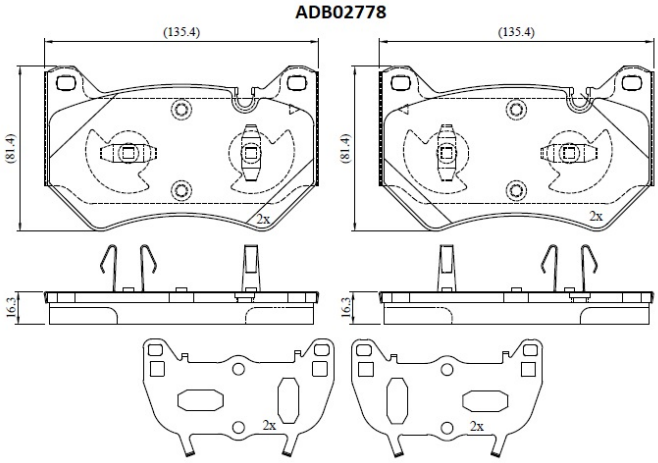

Specifications

Fitting Position	:	Front
Model Date	:	2018-
Or. Caliper	:	
WVA	:	2,61,96,26,197

FMSI	:	
Length	:	136
Width	:	81
Thickness	:	17