**Make: AUDI**

**Model: Q7**

**Part Number: ADB02691**

**Vehicle Manufacturing/Engine:**

**ADB02691**

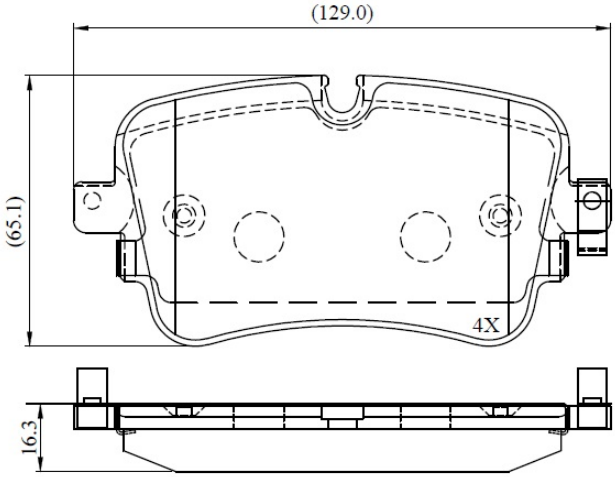


**Specifications**

| | | |
|---|---|---|
| **Fitting Position** | : | Rear |
| **Model Date** | : | 2015-2019 |

| | | |
|---|---|---|
| **Or. Caliper** | : | |
| **WVA** | : | 22307 |
| **FMSI** | : | |
| **Length** | : | 129.3 |
| **Width** | : | 64.7 |
| **Thickness** | : | 17 |