## Make: AUDI

## Model: R8

## Part Number: ADB13167

## Vehicle Manufacturing/Engine:

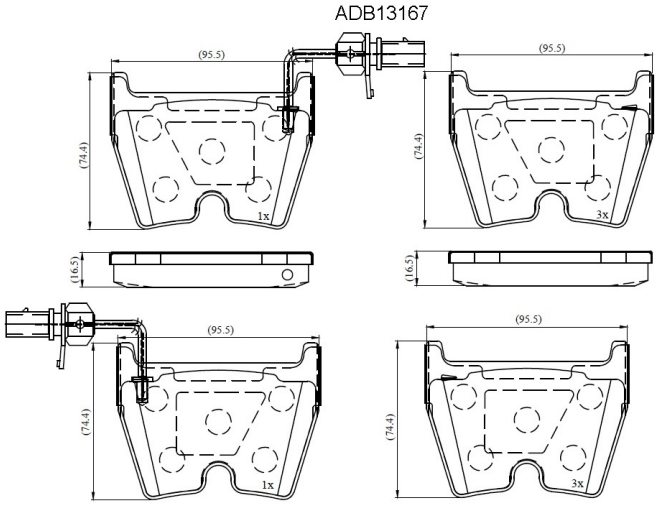


### Specifications

| | | |
|---|---|---|
| **Fitting Position** | : | Front |
| **Model Date** | : | 2010-2015 |
| **Or. Caliper** | : | |

| | | |
|---|---|---|
| **WVA** | : | 23751 |
| **FMSI** | : | |
| **Length** | : | 95.7 |
| **Width** | : | 74.4 |
| **Thickness** | : | 16.7 |