Make: BMW

Model: 1 Sports Hatch

Part Number: ADB02926

Vehicle Manufacturing/Engine:

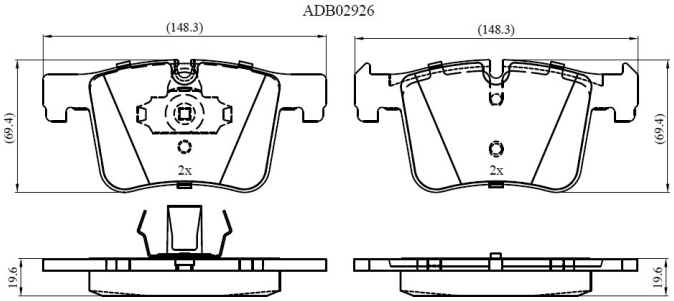

Specifications

Fitting Position	:	Front
Model Date	:	2011-2015
Or. Caliper	:	
WVA	:	25199
FMSI	:	
Length	:	

Width	:
Thickness	: