Make: BMW

Model: 1 Sports Hatch

Part Number: ADB06110

Vehicle Manufacturing/Engine:

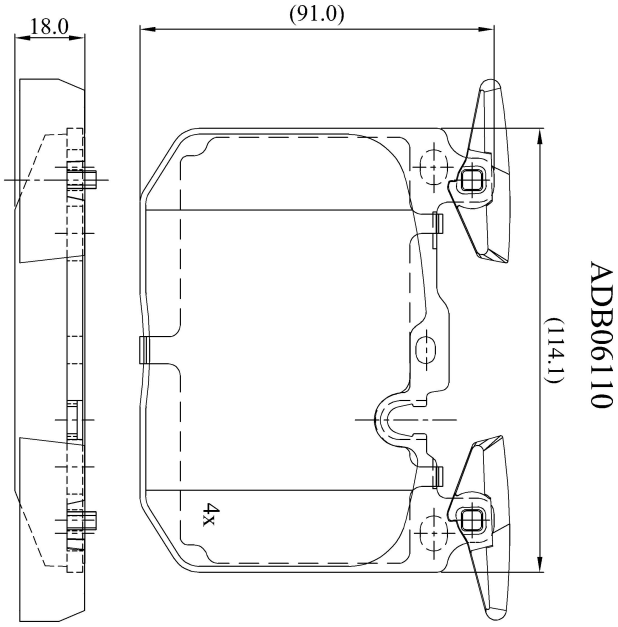

Specifications

Fitting Position	:	Front
Model Date	:	2012-
Or. Caliper	:	
WVA	:	25028
FMSI	:	
Length	:	114.5
Width	:	91.4
Thickness	:	18.3