**Make: BMW**

**Model: 1 Sports Hatch**

**Part Number: ADB06110**

**Vehicle Manufacturing/Engine:**

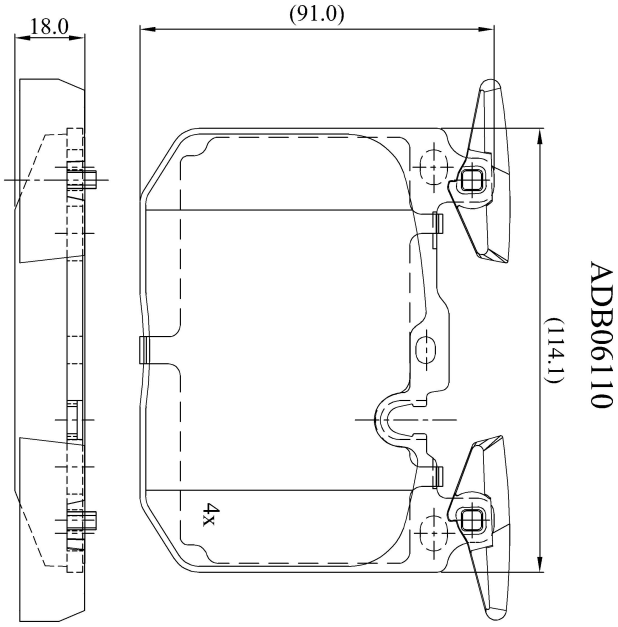


## Specifications

| | | |
|---|---|---|
| **Fitting Position** | : | Front |
| **Model Date** | : | 2015- |
| **Or. Caliper** | : | |
| **WVA** | : | 25028 |
| **FMSI** | : | |
| **Length** | : | 114.5 |
| **Width** | : | 91.4 |
| **Thickness** | : | 18.3 |