## Make: BMW

## Model: 3 Touring Van

## Part Number: ADB02527

## Vehicle Manufacturing/Engine:

**ADB02527**

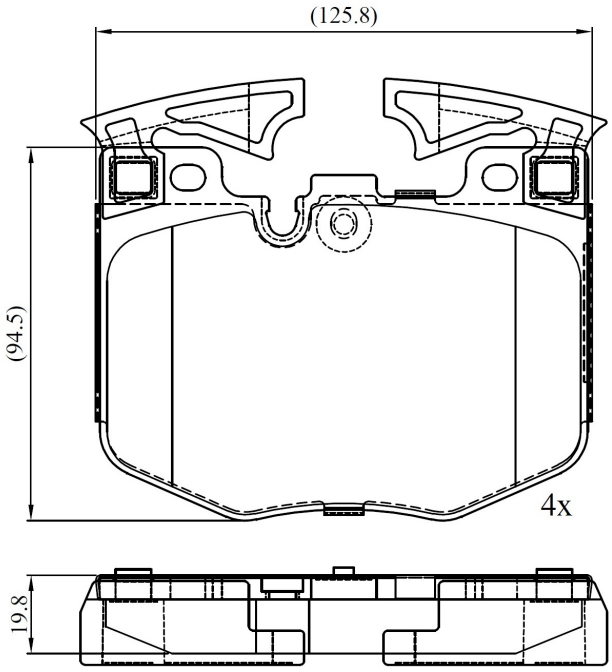


### Specifications

| | | |
|---|---|---|
| **Fitting Position** | : | Front |
| **Model Date** | : | 2019- |
| **Or. Caliper** | : | |
| **WVA** | : | 22425 |
| **FMSI** | : | |
| **Length** | : | 125.8 |
| **Width** | : | 94.8 |
| **Thickness** | : | 20 |