Make: BMW

Model: 3 Touring

Part Number: ADB02865

Vehicle Manufacturing/Engine:

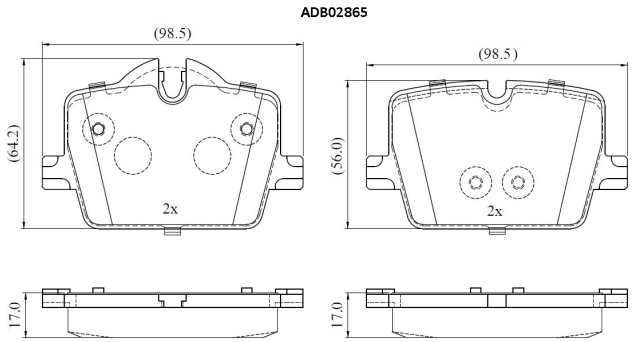

Specifications

Fitting Position	:	Rear
Model Date	:	2019-
Or. Caliper	:	
WVA	:	2,14,33,21,434
FMSI	:	
Length	:	98.7

Width	:	64.2,55.9
Thickness	:	17