## Make: BMW

## Model: 3 Touring

## Part Number: ADB02926

## Vehicle Manufacturing/Engine:

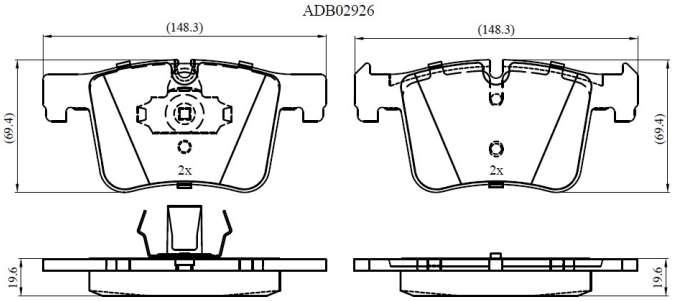


### Specifications

| | | |
|---|---|---|
| **Fitting Position** | : | Front |
| **Model Date** | : | 2013-2015 |
| **Or. Caliper** | : | |
| **WVA** | : | 25199 |
| **FMSI** | : | |
| **Length** | : | |

| | |
|---|---|
| **Width** | : |
| **Thickness** | : |