Make: BMW

Model: 3 Touring

Part Number: ADB23260

Vehicle Manufacturing/Engine:

ADB23260

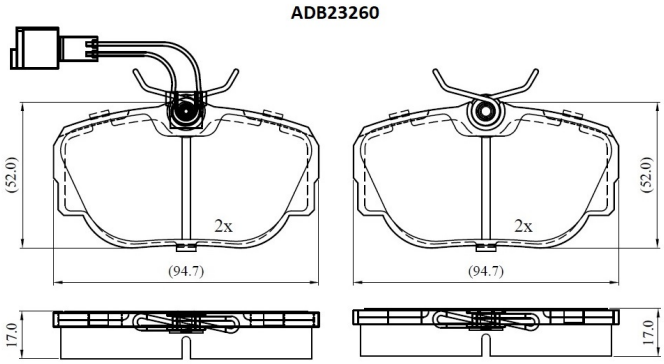

Specifications

Fitting Position	:	Front
Model Date	:	1988-1993
Or. Caliper	:	
WVA	:	21173
FMSI	:	

Length	:	94.7
Width	:	52
Thickness	:	17