Make: BMW

Model: 4 Gran Coupe

Part Number: ADB02983

Vehicle Manufacturing/Engine:

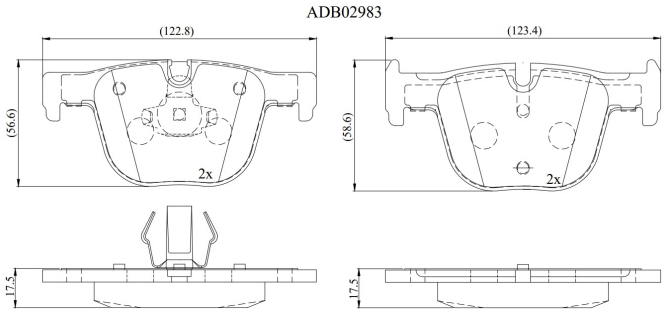

Specifications

Fitting Position	:	Rear
Model Date	:	2014-
Or. Caliper	:	
WVA	:	25514
FMSI	:	
Length	:	

Width	:
Thickness	: