Make: BMW

Model: 435i

Part Number: ADB03058

Vehicle Manufacturing/Engine:

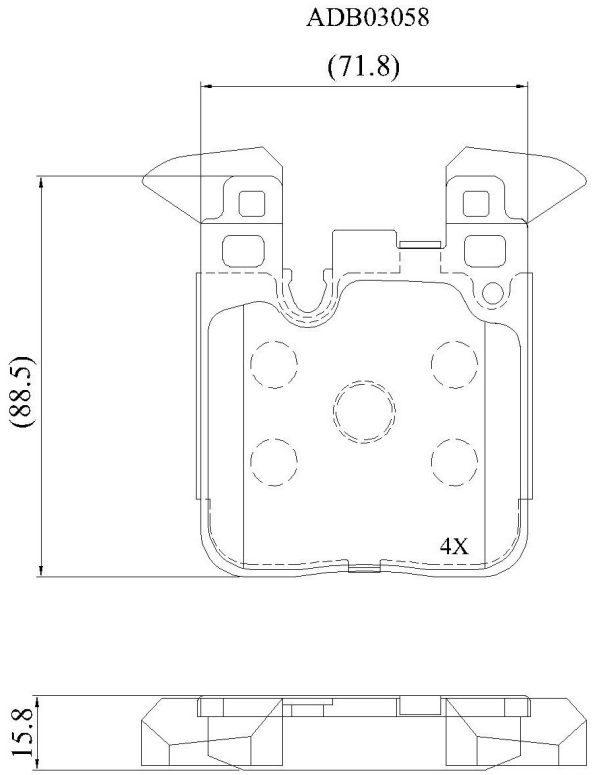

Specifications

Fitting Position	:	Rear
Model Date	:	2014-2016

Or. Caliper	:	
WVA	:	
FMSI	:	D1656
Length	:	71.8
Width	:	88.5
Thickness	:	15.8