Make: BMW

Model: 5 Series

Part Number: ADB06097

Vehicle Manufacturing/Engine:

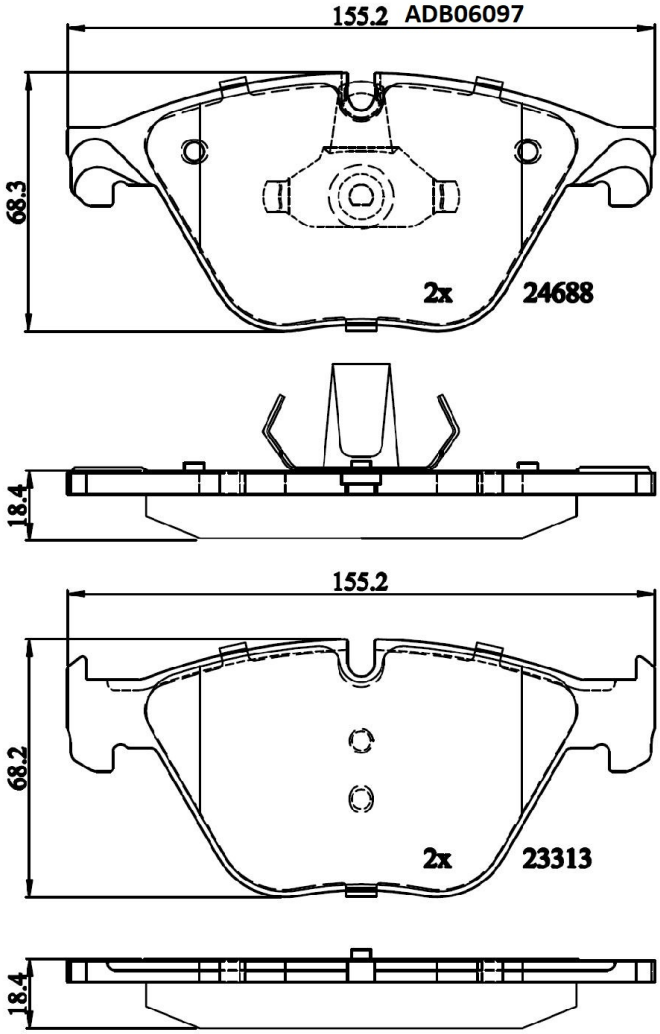

Specifications

Fitting Position	:	Front
Model Date	:	09/11-
Or. Caliper	:	
WVA	:	23313, 24688
FMSI	:	
Length	:	155.2
Width	:	68.3
Thickness	:	18.4