## Make: BMW

## Model: 5 Touring

## Part Number: ADB03257

## Vehicle Manufacturing/Engine:

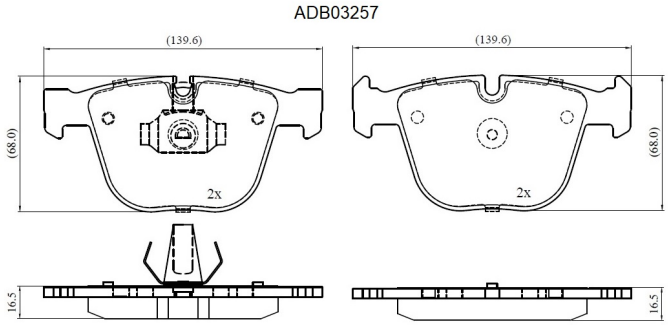


### Specifications

| | | |
|---|---|---|
| **Fitting Position** | : | Rear |
| **Model Date** | : | 2007-2010 |
| **Or. Caliper** | : | |
| **WVA** | : | 23730 |
| **FMSI** | : | |
| **Length** | : | 139.6 |

| | | |
|---|---|---|
| **Width** | : | 68 |
| **Thickness** | : | 16.5 |