Make: BMW

Model: 5

Part Number: ADB02527

Vehicle Manufacturing/Engine:

ADB02527

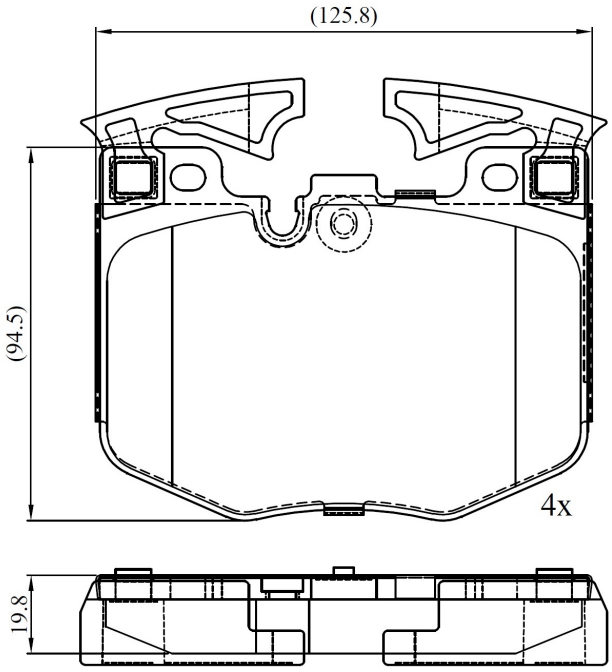

Specifications

Fitting Position	:	Front
Model Date	:	2019-
Or. Caliper	:	
WVA	:	22425
FMSI	:	
Length	:	125.8
Width	:	94.8
Thickness	:	20