Make: BMW

Model: 535i

Part Number: ADB01157

Vehicle Manufacturing/Engine:

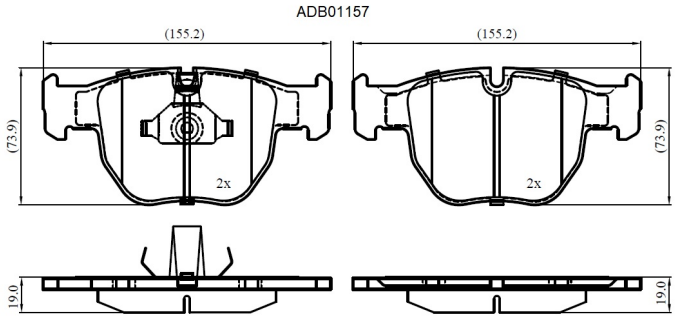

Specifications

Fitting Position	:	Front
Model Date	:	04/99->06/03
Or. Caliper	:	Ate
WVA	:	21486/21642
FMSI	:	
Length	:	155.2

Width	:	73.9
Thickness	:	19