Make: BMW

Model: 6

Part Number: ADB03257

Vehicle Manufacturing/Engine:

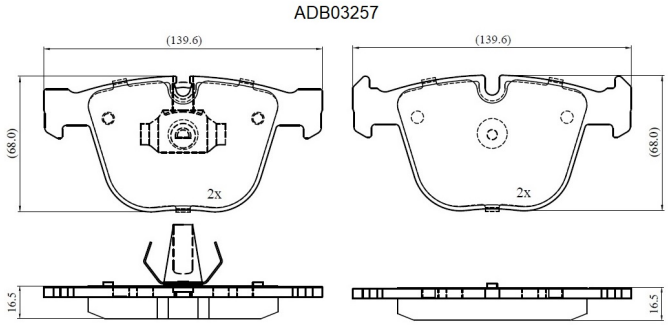

Specifications

Fitting Position	:	Rear
Model Date	:	2005-2010
Or. Caliper	:	
WVA	:	23730
FMSI	:	
Length	:	139.6

Width	:	68
Thickness	:	16.5