Make: BMW

Model: 730d

Part Number: ADB01793

Vehicle Manufacturing/Engine:

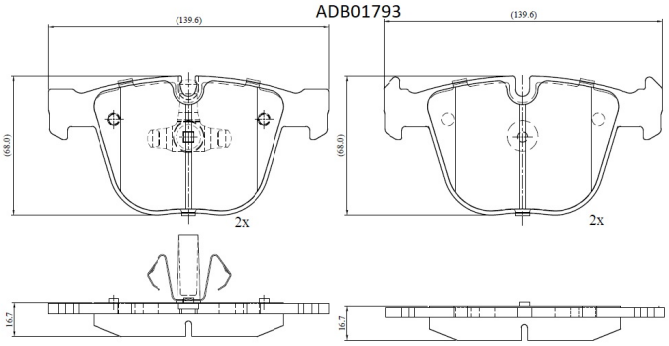

Specifications

Fitting Position	:	Rear
Model Date	:	10/08-
Or. Caliper	:	
WVA	:	2,37,31,24,695
FMSI	:	
Length	:	139.6

Width	:	67.8
Thickness	:	16.7