Make: BMW

Model: X5

Part Number: ADB03008

Vehicle Manufacturing/Engine:

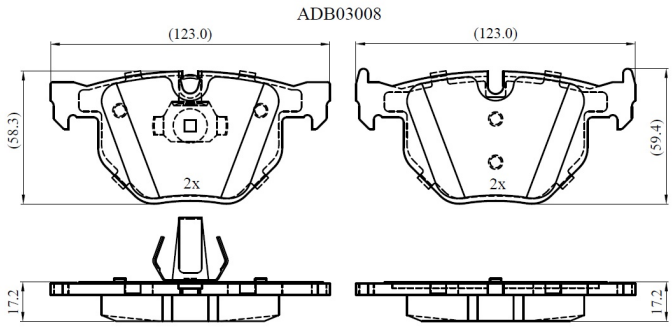

Specifications

Fitting Position	:	Rear
Model Date	:	2013-2018
Or. Caliper	:	
WVA	:	23447
FMSI	:	
Length	:	

Width	:
Thickness	: