Make: BMW

Model: Z8

Part Number: ADB01003

Vehicle Manufacturing/Engine:

ALLIED NIPPON PRIVATE LIMITED
(Formerly known as Allied Nippon Ltd.)
CIN : U34300DL1988PTC030910

ADB01003

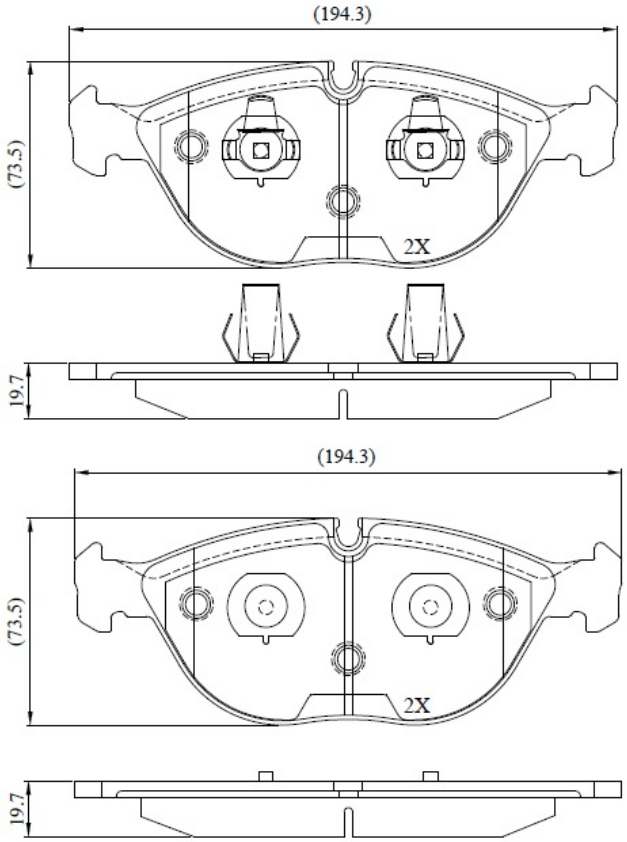

Specifications

Fitting Position	:	Front

Model Date	:	00-03->
Or. Caliper	:	
WVA	:	21484, 21485
FMSI	:	
Length	:	194.5
Width	:	73.5
Thickness	:	20