Make: CHEVROLET

Model: Beretta Range

Part Number: ADB3483

Vehicle Manufacturing/Engine:

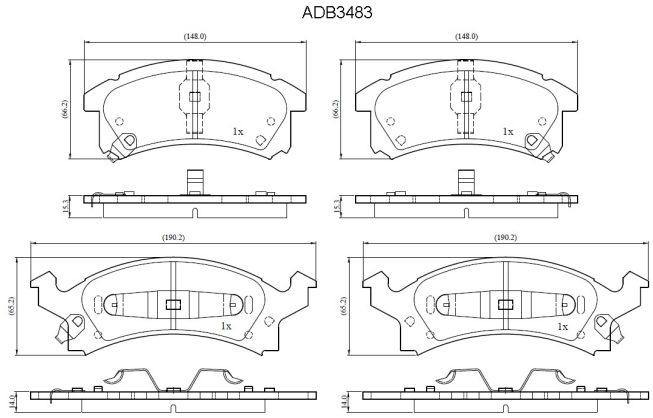

Specifications

Fitting Position	:	Front
Model Date	:	01/92-12/95
Or. Caliper	:	
WVA	:	
FMSI	:	

Length	:	147.6/190.2
Width	:	66.2/65.2
Thickness	:	15.3/14.0