Make: CHEVROLET

Model: Kalos

Part Number: ADB01598

Vehicle Manufacturing/Engine:

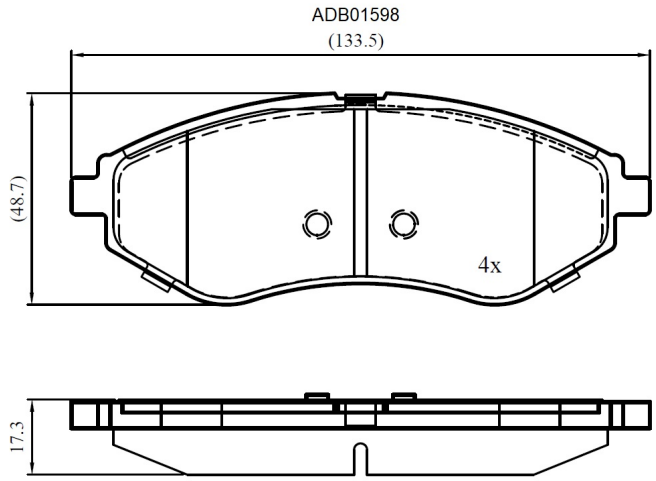

Specifications

Fitting Position	:	Front
Model Date	:	03/05->
Or. Caliper	:	Akebono

WVA	:	23974
FMSI	:	
Length	:	133.5
Width	:	48.7
Thickness	:	17.3