Make: CHEVROLET

Model: SPARK

Part Number: ADB33226

Vehicle Manufacturing/Engine:

ADB33226

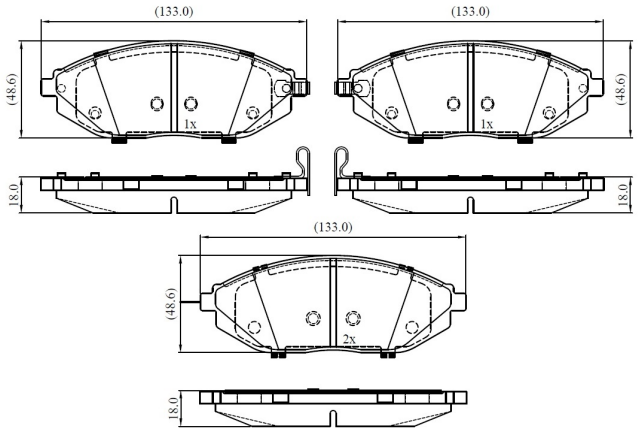

Specifications

Fitting Position	:	Front
Model Date	:	2010-
Or. Caliper	:	

WVA	:	25268
FMSI	:	
Length	:	133
Width	:	48.6
Thickness	:	18